Summary in Graph

Exam Summary (GO Classes CS 2026 | All India Mock Test 5 (Set 2))

Qs. Attempted:	0 0 + 0	Correct Marks:	0 0 + 0
Correct Attempts:	0 0 + 0	Penalty Marks:	0 0 + 0
Incorrect Attempts:	0 0 + 0	Resultant Marks:	0 0 + 0

Total Questions:	65 30 + 35
Total Marks:	100 30 + 70
Exam Duration:	180 Minutes
Time Taken:	0 Minutes

Individual Question Statistics

Select Metric: Marks Obtained

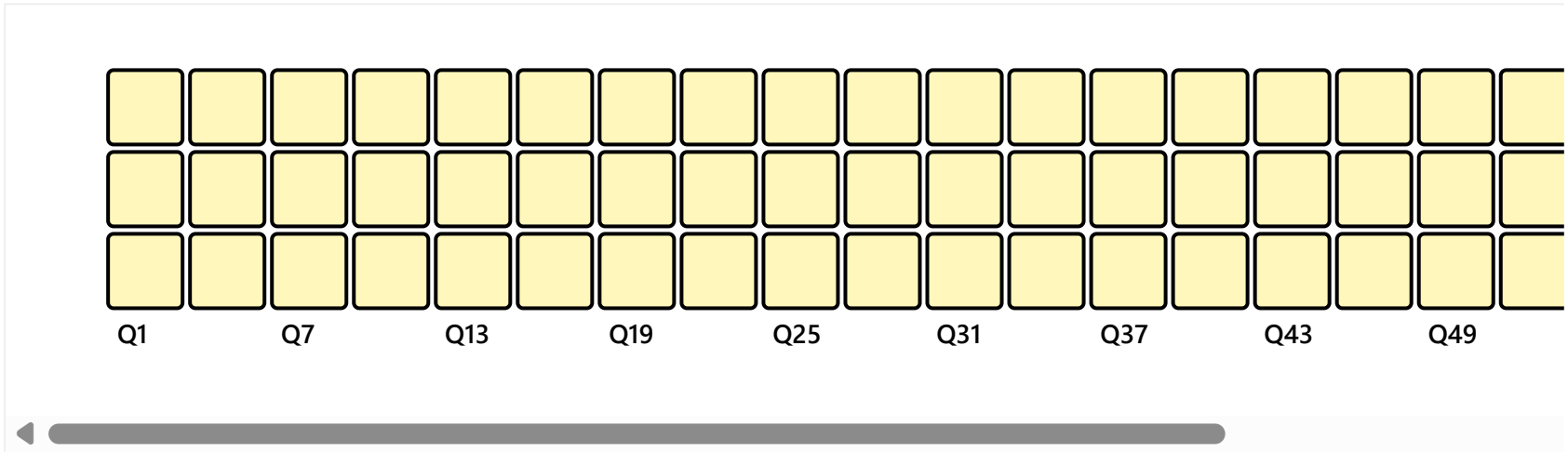

* Average Stats based on first-attempt stats of Top 10% (98) out of 975 users

EXAM RESPONSE | EXAM STATS | FEEDBACK

Aptitude

Q #1 | Multiple Choice Type | Award: 1 | Penalty: 0.33 | Quantitative Aptitude

It takes one research assistant a total of 10 hours to complete 10 pages of data entry. Assuming their computer skills are of the same level, how long will it take for 2 research assistants to complete 20 pages of data entry each?

A. 20 hours

B. 5 hours

C. 40 hours

D. 10 hours

Your Answer: | Correct Answer: A | Not Attempted | Time taken: 00min 00sec | Discuss

Q #2 | Multiple Choice Type | Award: 1 | Penalty: 0.33 | Quantitative Aptitude

In a small tea shop, the average profit was ₹500 per day over a 10-day period.

During this period, if the average daily profit was ₹360 per day for the first 6 days, what was the average daily profit for the last 4 days?

A. ₹680

B. ₹700

C. ₹710

D. ₹720

Your Answer: | Correct Answer: C | Not Attempted | Time taken: 00min 00sec | Discuss

Q #3 | Multiple Choice Type | Award: 1 | Penalty: 0.33 | Verbal Aptitude

The Headmaster _____ to speak to you.

Which of the following options is INCORRECT to complete the above sentence?

A. is wanting

B. wants

C. want

D. was wanting

Your Answer: | Correct Answer: C | Not Attempted | Time taken: 00min 00sec | Discuss

Q #4 | Multiple Choice Type | Award: 1 | Penalty: 0.33 | Quantitative Aptitude

Three students took a 3-question quiz. Their teacher recorded their answers in a chart:

	Question #1	Question #2	Question #3
Student A	15	36	24
Student B	20	38	24
Student C	15	54	24

Each student answered exactly 2 questions correctly. What is the sum of the correct answers to the 3 questions?

A. 75

B. 77

C. 80

D. 82

Your Answer: | Correct Answer: B | Not Attempted | Time taken: 00min 00sec | Discuss

Q #5 | Multiple Choice Type | Award: 1 | Penalty: 0.33 | Analytical Aptitude

Figure 1 shows an arrangement of 3 lines with 1 intersection point, and Figure 2 shows an arrangement of 3 lines with 3 intersection points.

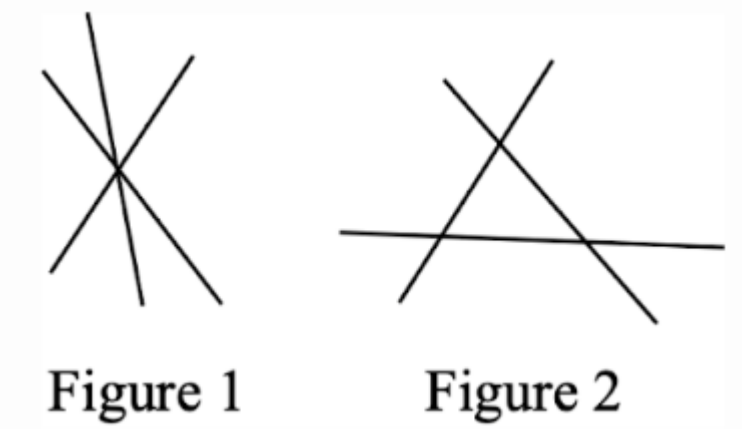

What is the maximum number of intersection points that can appear in an arrangement of 4 lines?

A. 5

B. 4

C. 8

D. 6

Your Answer: | Correct Answer: D | Not Attempted | Time taken: 00min 00sec | Discuss

Q #6 | Multiple Choice Type | Award: 2 | Penalty: 0.67 | Quantitative Aptitude

A buys n copies of a book at 20% discount. B gets the same book at 30% discount. What is the minimum value of n for which B can buy one extra copy of the book, spending the same amount as A ?

A. 7

B. 8

C. 6

D. This problem cannot be solved unless the marked price of the book is known.

Your Answer: | Correct Answer: A | Not Attempted | Time taken: 00min 00sec | Discuss

Q #7 Multiple Choice Type Award: 2 Penalty: 0.67 Quantitative Aptitude

At the start of this month, Mathilde and Salah each had 100 coins. For Mathilde, this was 25% more coins than she had at the start of last month. For Salah, this was 20% fewer coins than he had at the start of last month. The total number of coins that they had at the start of last month was

A. 180

B. 185

C. 190

D. 205

Your Answer: Correct Answer: D Not Attempted Time taken: 00min 00sec Discuss

Q #8 Multiple Choice Type Award: 2 Penalty: 0.67 Analytical Aptitude

Given the sequence $A, B, B, C, C, C, D, D, D, D, \ldots$ etc., that is one A, two Bs, three Cs, four Ds, five Es and so on, the 240th letter in the sequence will be:

A. V

B. U

C. T

D. W

Your Answer: Correct Answer: A Not Attempted Time taken: 00min 03sec Discuss

Q #9 Multiple Choice Type Award: 2 Penalty: 0.67 Quantitative Aptitude

A warehouse stores raw material that is used by machines every day. Machine A consumes 2 kg of material per day, while Machine B consumes 4 kg of material per day.

At the start, two pairs of Machine A and one pair of Machine B are installed in the warehouse. The initial stock of raw material is $16{,}000$ kg.

Meanwhile, new raw material is added to the warehouse due to regular supply, at a rate of $1{,}000$ kg every 100 days.

How much raw material will remain in the warehouse after $1{,}000$ days?

A. 100 kg

B. 500 kg

C. $1,000$ kg

D. $10,000$ kg

Your Answer: Correct Answer: D Not Attempted Time taken: 00min 00sec Discuss

Q #10 | Multiple Choice Type | Award: 2 | Penalty: 0.67 | Quantitative Aptitude

On a very hot day, tired after working all day in the field, the farmer goes to the canteen and orders a pint of mineral water. He next orders $2/3^{\text{rd}}$ pints, and then $4/9^{\text{th}}$, $8/27^{\text{th}}$ pints etc. If he kept on doing this for infinitely long, how many pints would the man have ultimately had?

A. 3 pints

B. 2.2 pints

C. Infinite pints

D. 2 pints

Your Answer: | Correct Answer: A | Not Attempted | Time taken: 00min 00sec | Discuss

Technical

Q #1 | Multiple Choice Type | Award: 1 | Penalty: 0.33 | Compiler Design

Let G be a context-free grammar that is unambiguous, left-factored, and does not have any left-recursion.

Which of the following is true for G ?

A. G is $\mathrm{LL}(1)$.

B. G may not be $\mathrm{LL}(1)$, but it is definitely $\mathrm{LR}(1)$.

C. G is not $\mathrm{LR}(1)$.

D. None of the above

Your Answer: | Correct Answer: D | Not Attempted | Time taken: 00min 00sec | Discuss

Q #2 | Multiple Choice Type | Award: 1 | Penalty: 0.33 | Compiler Design

In $\mathrm{LR}(1)$ parsing, given an $\mathrm{LR}(1)$ item $[\mathrm{A} \rightarrow \alpha \bullet \gamma, \delta]$, what lookahead allows a shift to be performed? (ignoring any other $\mathrm{LR}(1)$ items added to the state by closure)

A. The terminal at the beginning of γ.

B. The terminal at the ending of α.

C. The terminal at the beginning of α.

D. The terminal at the beginning of δ.

Your Answer: | Correct Answer: A | Not Attempted | Time taken: 00min 00sec | Discuss

Q #3 | Numerical Type | Award: 1 | Penalty: 0 | Compiler Design

For any particular CFG (control flow graph), there is a unique maximal CFG representing the same procedure, because given a CFG, combining non-maximal basic blocks until none remain gives a unique and equivalent CFG.

Consider the following CFG:

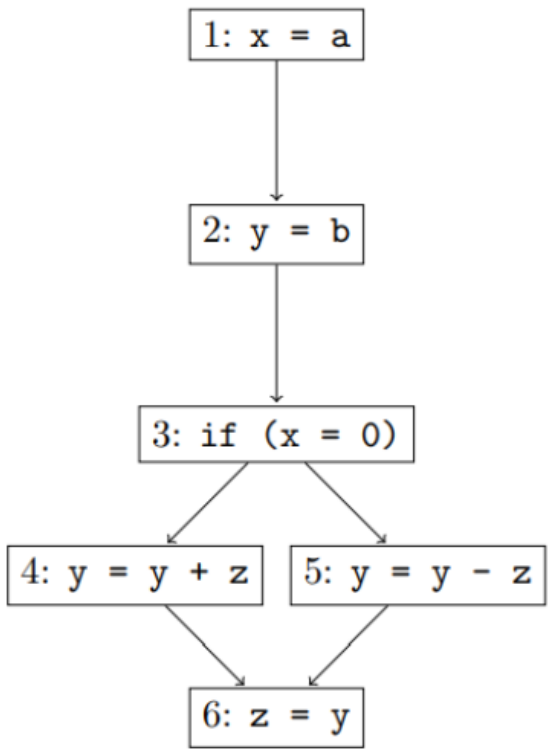

For the above CFG, we construct the maximal Control Flow Graph for the same function (i.e. we use maximal length basic blocks) The number of nodes in the maximal CFG is ?

Your Answer: | Correct Answer: 4 | Not Attempted | Time taken: 00min 00sec | Discuss

Q #4 | Multiple Choice Type | Award: 1 | Penalty: 0.33 | Mathematical Logic

Which of the following sets of propositional formulas is not satisfiable ?

A. $\{(p_0 \rightarrow p_1), (p_1 \rightarrow p_2), ((p_2 \vee p_3) \leftrightarrow \neg p_1)\}$

B. $\{\neg(\neg p_1 \vee p_0), (p_0 \vee \neg p_2), (p_1 \rightarrow \neg p_2)\}$.

C. $\{(p_3 \rightarrow p_1), (p_0 \vee \neg p_1), \neg(p_3 \wedge p_0), p_3\}$.

D. None

Your Answer: | Correct Answer: C | Not Attempted | Time taken: 00min 00sec | Discuss

Q #5 | Multiple Choice Type | Award: 1 | Penalty: 0.33 | CO & Architecture

What addressing best describes the below command?

$$\text{MOV AX, } [0100]$$

This command moves $[0100]$ to register AX. The register contents are replaced. The brackets however indicate that the data is actually found at the address 0100 in the memory. So the register is getting data directly from the memory.

A. Immediate addressing

B. Direct memory addressing

C. In-direct memory addressing

D. Register addressing

Your Answer: | Correct Answer: B | Not Attempted | Time taken: 00min 00sec | Discuss

Q #6 | Multiple Choice Type | Award: 1 | Penalty: 0.33 | CO & Architecture

Assume that a program has an execution *profile* in which 85% of the instructions are simple (such as AND, XOR, ADD, and BRANCH) and the remaining 15% are complex instructions (such as MUL and DIV). Additionally, consider that simple instructions require 2 machine cycles and complex instructions require 12 cycles on a CISC machine (each cycle = 10 ns). On a RISC machine, simple instructions are executed in 1 cycle, whereas complex instructions must be simulated by software, requiring, on average, 20 cycles per instruction. Due to its simplicity, the cycle time in a RISC machine is 8 ns. Also consider that the program required 100,000,000 instructions to be completed.

What is the time spent, in seconds, executing this program, respectively, on the CISC and RISC machines?

A) 1 and 0.8 B) 3.5 and 3.08 C) 10 and 12.8 D) 8.5 and 1.5

Your Answer: | Correct Answer: B | Not Attempted | Time taken: 00min 00sec | Discuss

Q #7 | Multiple Choice Type | Award: 1 | Penalty: 0.33 | Databases

Consider an instance of the relation *Sailors* shown below:

sid	Name	Rating	Age
16	jones	3	20.0
32	jonah	4	56.0
24	ahab	7	43.0
65	moby	6	15.0

What does the following query return?

```
SELECT S.Name
FROM Sailors S
WHERE S.rating > ANY (
    SELECT S1.Rating
    FROM Sailors S1
    WHERE S1.age < 21
)
```

A. ahab

B. ahab, jonah, moby

C. ahab, jonah

D. moby

Your Answer: | Correct Answer: B | Not Attempted | Time taken: 00min 00sec | Discuss

Q #8 | Numerical Type | Award: 1 | Penalty: 0 | CO & Architecture

Assume that in a 5-stage pipeline, the longest stage delay is 0.9ns and the pipeline register delay is 0.1ns . What is the clock cycle time of the 5-stage pipeline, in ns?

Your Answer: | Correct Answer: 1 | Not Attempted | Time taken: 00min 00sec | Discuss

Q #9 | Multiple Select Type | Award: 1 | Penalty: 0 | Operating System

Monty Mole and Rocky Wrench disagree about the best page replacement policies for demand paging. Assume that the system has three page frames of physical memory (frames 1–3), and the program uses four pages of virtual memory (A, B, C, D). Virtual memory accesses are written as a comma-separated list (e.g., A, B, C, D, A).

Rocky Wrench is convinced that the best page replacement policy for demand paging is FIFO (First-In First-Out). The first two page accesses are fixed and are shown below.

Frame	Access A	Access B
1	A	
2		B
3		

Which of the following sequences of six additional page accesses, when appended after the initial accesses A, B, will cause every one of these six accesses to result in a page fault under the FIFO page replacement policy?

Select all options that are correct.

A. C, D, A, B, C, D
B. D, C, A, B, D, C
C. A, B, C, D, A, B
D. C, A, D, B, C, A

Your Answer: | Correct Answer: A;B | Not Attempted | Time taken: 00min 00sec | Discuss

Q #10 | Multiple Choice Type | Award: 1 | Penalty: 0.33 | Operating System

A system uses base and bounds registers for dynamic relocation. It has a single CPU, and each process has a virtual address space of 1 KB $(1024$ bytes$)$.

Active processes are shown below:

Process	Base	Bounds
A	100	10
B	1000	20
C	500	50

The following physical memory accesses are observed (Read it row wise):

$$100, 101, 109, 103, 1010, 1011, 1012, 1001, 540, 539, 538, 537$$
$$102, 103, 104, 105, 1000, 1002, 1004, 1008, 500, 501, 502, 503$$

Which CPU scheduling policy best explains this behavior?

A. Shortest Job First (SJF)

B. Shortest Time to Completion First (STCF)

C. Round Robin (RR)

D. First Come First Served (FCFS)

Your Answer: | Correct Answer: C | Not Attempted | Time taken: 00min 00sec | Discuss

Q #11 | Multiple Choice Type | Award: 1 | Penalty: 0.33 | Operating System

An application program contains a variable `a` of type `char *`, which points to an array of characters. The ith element is accessed as `a[i]`. Each character occupies one byte, and C arrays are contiguous in virtual memory.

The system uses 32-bit virtual and physical addresses with paged virtual memory and a page size of 4 KB (2^{12} bytes). The valid page table entries are given below; all other pages are invalid.

The valid page table entries are:

Virtual Page #	Physical Frame #
0x00010	0x00032
0x00011	0x00033
0x00012	0x00010
0x00040	0x00021
0x00041	0x00022

If `a` $=$ 0x00040EF0 and `i` $=$ 0x110, what is the physical address of `a[i]`?

A. 0x00021FF0

B. 0x00022000

C. 0x00022F00

D. 0x00021EF0

Your Answer: | Correct Answer: B | Not Attempted | Time taken: 00min 00sec | Discuss

Q #12 | Multiple Choice Type | Award: 1 | Penalty: 0.33 | Programming in C

What is the output of the following program?

```
main()
{
  int array[10] = { 20, 18, 16, 14, 12, 10, 8, 6, 4, 2 };
  int *ptr;
  ptr = array;
  printf("%d,%d", *ptr + 2, *(ptr + 2));
}
```

A. $16, 16$

B. $20, 16$

C. $22, 16$

D. $22, 22$

Your Answer: | Correct Answer: C | Not Attempted | Time taken: 00min 00sec | Discuss

Q #13 | Numerical Type | Award: 1 | Penalty: 0 | Programming in C

What will get displayed when the following program is executed? $\begin{aligned} &\texttt{#include } \\ &\texttt{int main()} \\ &\texttt{\{} \\ &\quad \texttt{int a[] = \{10, 20, 30, 40, 50\};} \\ &\quad \texttt{int *p = a;} \\ &\quad \texttt{*(p + 2) = *(a + 4) - *(p + 1);} \\ &\quad \texttt{printf("%d", a[3]);} \\ &\quad \texttt{return 0;} \\ &\texttt{\}} \end{aligned}$

Your Answer: | Correct Answer: 40 | Not Attempted | Time taken: 00min 00sec | Discuss

Q #14 | Numerical Type | Award: 1 | Penalty: 0 | Programming in C

Consider the following `switch` statement, where `a` is an integer variable.

What will be printed if `a = 10` initially?

```
switch(a)
{
  case 10: a = a + 10;
  case 20: a = a + 20;
  case 30: a = a + 30;
  case 40: a = a + 40;
    break;
  case 50: a = a + 50;
  default: a = a + 100;
}
printf("%d", a);
```

Your Answer: | Correct Answer: 110 | Not Attempted | Time taken: 00min 00sec | Discuss

Q #15 | Multiple Select Type | Award: 1 | Penalty: 0 | Data Structures

Consider the following statements.

Select **all** statements that are correct.

A. A hash table guarantees constant lookup time.

B. Finding the minimum element in a binary min heap (without removing it) takes $\Theta(\log n)$ time.

C. If every node in a binary tree has either 0 or 2 children, then the height of the tree is $\Theta(\log n)$.

D. Given a heap A where each key is independently increased or decreased by 1, the heap property can be restored in linear time.

Your Answer: | Correct Answer: D | Not Attempted | Time taken: 00min 00sec | Discuss

Q #16 | Multiple Choice Type | Award: 1 | Penalty: 0.33 | Data Structures

Let `I(u)` denote the number of internal (non-leaf) nodes in a binary tree rooted at `u`. Assume that the function `isInternal(u)` returns `1` if `u` has at least one child, and `0` otherwise.

Which of the following relations can be used to recursively compute `I(u)`?

A. `I(u) = I(u->left) + I(u->right)`

B. `I(u) = I(u->left) + I(u->right) + 1`

C. `I(u) = I(u->left) + I(u->right) + isInternal(u)`

D. `I(u) = I(u->left) + I(u->right) + isInternal(u) + 1`

Your Answer: | Correct Answer: C | Not Attempted | Time taken: 00min 00sec | Discuss

Q #17 | Numerical Type | Award: 1 | Penalty: 0 | Data Structures

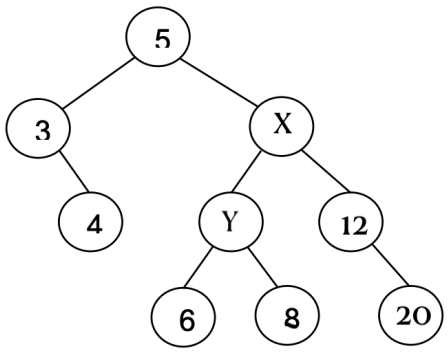

The graph shown above is a binary search tree of distinct positive integers. What will be the minimum possible difference of unknown nodes X to Y ?

Your Answer: | Correct Answer: 2 | Not Attempted | Time taken: 00min 00sec | Discuss

Q #18 | Multiple Select Type | Award: 1 | Penalty: 0 | Algorithms

Consider the following characters with their frequencies:

`A:1, B:5, C:13, D:15, E:17, F:25, G:36, H:100, I:130, J:170`

An optimal Huffman tree is constructed using the standard Huffman coding algorithm.

Which of the following statements is/are correct?

A. The characters `I` and `J` are combined in the second last step of the algorithm.

B. The character `A` has a shorter codeword than `H`.

C. The first pair of characters combined is `D` and `E`.

D. The root of the Huffman tree has total weight `300`.

Your Answer: | Correct Answer: A | Not Attempted | Time taken: 00min 00sec | Discuss

Q #19 | Numerical Type | Award: 1 | Penalty: 0 | Algorithms

Consider the $0/1$ Knapsack problem, where each item can be selected at most once. The knapsack has a total capacity of 7. The available items are given below:

Item	Weight	Value
A	1	3
B	2	5
C	3	7
D	4	8
E	5	9

Using an optimal selection of items, the knapsack must not exceed its capacity. What is the maximum total value that can be obtained without exceeding the knapsack capacity?

Your Answer: | Correct Answer: 16 | Not Attempted | Time taken: 00min 00sec | Discuss

Q #20 | Multiple Choice Type | Award: 1 | Penalty: 0.33 | Algorithms

Consider the following procedure for determining whether a given name appears in an alphabetized list of n names.

Step 1. Choose the name at the middle of the list (if $n = 2k$, choose the k th name); if that is the given name, you are done; if the list is only one name long, you are done. If you are not done, go to Step 2.

Step 2. If the given name comes alphabetically before the name at the middle of the list, apply Step 1 to the first half of the list; otherwise, apply Step 1 to the second half of the list.

If n is very large, the maximum number of steps required by this procedure is close to

A. n

B. n^2

C. $\log_2 n$

D. $n \log_2 n$

Your Answer: | Correct Answer: C | Not Attempted | Time taken: 00min 00sec | Discuss

Q #21 | Multiple Choice Type | Award: 1 | Penalty: 0.33 | Algorithms

Which of the following is a solution to the recurrence $T(n) = 9 \cdot T(n/3) + n^3$?

A. $\Theta\left(n^2\right)$

B. $\Theta\left(n^2 \log n\right)$

C. $\Theta\left(n^3\right)$

D. $\Theta\left(n^3 \log n\right)$

Your Answer: | Correct Answer: C | Not Attempted | Time taken: 00min 00sec | Discuss

Q #22 | Multiple Choice Type | Award: 1 | Penalty: 0.33 | Linear Algebra

One of the eigenvalues of a 3×3 matrix M is 3. If the determinant of the matrix M is 24 and the trace is 9 , then the smallest eigenvalue of the matrix M^{-1} is

A. $1/8$

B. $1/4$

C. $1/3$

D. $1/2$

Your Answer: | Correct Answer: B | Not Attempted | Time taken: 00min 00sec | Discuss

Q #23 | Multiple Choice Type | Award: 1 | Penalty: 0.33 | Computer Networks

A network has an RTT of $100\ \mathrm{ms}$ and uses a **stop-and-wait protocol**. Each packet is $1500\ \mathrm{bytes}$, and there is no queuing delay.

What is the **maximum achievable throughput** (in $\mathrm{Mb/s}$)?

A. $0.06\ \mathrm{Mb/s}$

B. $0.12\ \mathrm{Mb/s}$

C. $1.2\ \mathrm{Mb/s}$

D. $12\ \mathrm{Mb/s}$

Your Answer: | Correct Answer: B | Not Attempted | Time taken: 00min 00sec | Discuss

Q #24 | Multiple Choice Type | Award: 1 | Penalty: 0.33 | Computer Networks

Consider the network shown in the following diagram:

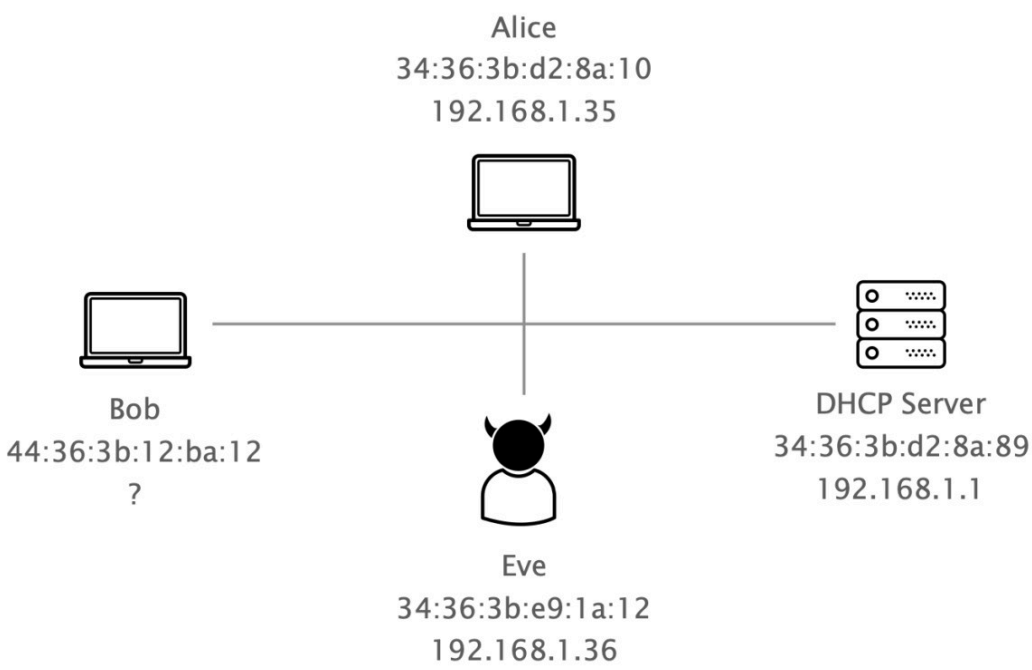

Two hosts Bob and Alice are connected to the same local network, which contains a DHCP server. Bob has just connected to the network and does not yet have an IP address. He wants to send IP packets to Alice, whose IP address is $192.168.1.35$.

Bob's MAC address is 44:36:3b:12:ba:12. The DHCP server has IP address $192.168.1.1$.

Which one of the following statements is **correct**?

A. Bob can directly send an ARP request to Alice even before obtaining an IP address from the DHCP server.

B. Bob must first obtain an IP address using DHCP, and then broadcast an ARP request to find Alice's MAC address.

C. Bob can send IP packets to Alice immediately after receiving a DHCP offer message.

D. Bob does not need to use ARP since Alice's IP address is already known.

Your Answer: | Correct Answer: B | Not Attempted | Time taken: 00min 00sec | Discuss

Q #25 | Multiple Choice Type | Award: 1 | Penalty: 0.33 | Computer Networks

With pure ALOHA, what is the probability a given node successfully send a packet? Suppose we have a total number of N nodes sharing the link, each transmits with a probability of p.

A. $p(1-p)^{2(N-1)}$

B. $p(1-p)^{(N-1)}$

C. $Np(1-p)^{(N-1)}$

D. $p(1-p)$

Your Answer: | Correct Answer: A | Not Attempted | Time taken: 00min 00sec | Discuss

Q #26 | Multiple Select Type | Award: 2 | Penalty: 0 | Compiler Design

Consider the grammar G defined by the following production rules, with four operators $\uparrow$, $-$, $+$ and $*$.

$\mathrm{E} \rightarrow \mathrm{E} \uparrow \mathrm{T} \mid \mathrm{T} - \mathrm{E} \mid \mathrm{T}$

$\mathrm{T} \rightarrow \mathrm{F} + \mathrm{E} \mid \mathrm{F} * \mathrm{T} \mid \mathrm{F}$

$\mathrm{F} \rightarrow \mathrm{a}$

Which of the following is/are TRUE?

A. $\uparrow$ is left associative.

B. $+$ right associative

C. $*$ has higher precedence than $-$.

D. G is unambiguous.

Your Answer: | Correct Answer: A;B | Not Attempted | Time taken: 00min 00sec | Discuss

Q #27 | Multiple Select Type | Award: 2 | Penalty: 0 | Combinatory

60 GO Classes' GATE CS students are allotted to 7 different IITs for M.Tech admissions. Which of the following must be true?

A. At least one IIT will get at least 8 students.

B. At least one IIT will get at least 9 students.

C. At least one IIT will get exactly 9 students.

D. At least one IIT will get at most 8 students.

Your Answer: | Correct Answer: A;B;D | Not Attempted | Time taken: 00min 00sec | Discuss

Q #28 | Multiple Choice Type | Award: 2 | Penalty: 0.67 | Combinatory

If the expression $\left(x+1+\frac{1}{x}\right)^4$ is fully expanded term-by-term and like terms are collected together,

there is one term which is independent of x.

The value of this term is

A. 10

B. 19

C. 51

D. 14

Your Answer: | Correct Answer: B | Not Attempted | Time taken: 00min 00sec | Discuss

Q #29 | Multiple Select Type | Award: 2 | Penalty: 0 | Set Theory & Algebra

Let $S = \{a, b\}$ be an alphabet, with total order $a < b$. Let $\Sigma = S^*$ be the set of all strings over S; for $w = s_1 s_2 \ldots s_n \in \Sigma$ we write $\ell(w) = n$, and for $1 \leq r \leq n = \ell(w)$ we write $w_r = s_1 s_2 \ldots s_r$. Denote by ε the unique word of Σ such that $\ell(\varepsilon) = 0$, the *null string*. Conventionally $w_0 = \varepsilon$ for all words $w \in \Sigma$.

Define relation $\prec$ on Σ as follows:

Let $v, w \in \Sigma$, and $n = \min\{\ell(v), \ell(w)\}$. Let $r = \max\{\, i \mid v_i = w_i \,\} \leq n$.

Then $v \prec w$ if:

either (i) $\ell(v) = r$;

or (ii) $v_{r+1} = v_r a,\ w_{r+1} = w_r b$, where $v_r = w_r$.

Which of following conditions are satisfied by $(\Sigma, \prec)$? (Select all that apply)

A. Reflexive

B. Symmetric

C. Anti-symmetric

D. Transitive

Your Answer: | Correct Answer: A;C;D | Not Attempted | Time taken: 00min 00sec | Discuss

Q #30 | Numerical Type | Award: 2 | Penalty: 0 | Graph Theory

The simple graph G on 12 vertices is constructed from two (vertex-disjoint) cycles, one on 5 vertices, the other on 7 vertices in such a way that we connect each vertex of one cycle with every vertex of the other cycle. Determine $\chi(\mathrm{G})$, the chromatic number of G.

Your Answer: | Correct Answer: 6 | Not Attempted | Time taken: 00min 00sec | Discuss

Q #31 | Multiple Choice Type | Award: 2 | Penalty: 0.67 | Digital Logic

Many people believe that since humans have 10 fingers, we use base 10.

The first expedition to Mars found only the ruins of a civilization. From the artifacts and pictures, the explorers deduced that the creatures who produced this civilization were four-legged beings with a tentacle that branched out at the end with a number of grasping "fingers". After much study, the explorers were able to translate Martian mathematics. They found the following equation:

$$5x^2 - 50x + 125 = 0$$

with the indicated solutions $x = 5$ and $x = 8$. The value $x = 5$ seemed legitimate enough, but $x = 8$ required some explanation. Then the explorers reflected on the way in which Earth's number system developed, and found evidence that the Martian system had a similar history. How many fingers would you say the Martians had?

A. 10 or 13

B. 13

C. 25

D. 13 or 25

Your Answer: | Correct Answer: B | Not Attempted | Time taken: 00min 00sec | Discuss

Q #32 | Multiple Choice Type | Award: 2 | Penalty: 0.67 | Digital Logic

The periodic sequence Q_1, Q_0 generated by the circuit shown below is ? $($it is assumed that after power up the state is $00)$

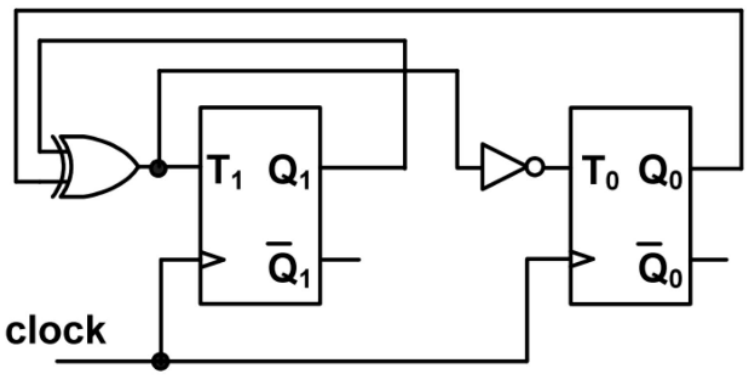

A. $00,\ 01,\ 10,\ 11$

B. $00,\ 01,\ 11,\ 10$

C. $00,\ 10,\ 11,\ 01$

D. $00,\ 10,\ 01,\ 11$

Your Answer: | Correct Answer: B | Not Attempted | Time taken: 00min 00sec | Discuss

Q #33 | Multiple Choice Type | Award: 2 | Penalty: 0.67 | Digital Logic

Consider the following Karnaugh map for a logic function $F(A, B, C, D)$:

CD \ AB	00	01	11	10
00	0	0	1	0
01	1	0	0	0
11	1	1	1	0
10	0	0	1	0

All the essential prime implicants of $F(A, B, C, D)$ are:

A. $A'B'D, A'CD, ABD', ABC, BCD$

B. $A'B'D, A'CD, ABD, ABC$

C. $A'B'D, ABD, BCD$

D. $A'B'D, ABD'$

Your Answer: | Correct Answer: D | Not Attempted | Time taken: 00min 00sec | Discuss

Q #34 | Numerical Type | Award: 2 | Penalty: 0 | Digital Logic

For the circuit shown in the figure, the delays of NOR gates, multiplexers and inverters are 2 ns, 1.5 ns and 1 ns, respectively. If all the inputs P, Q, R, S and T are applied at the same time instant, the maximum propagation delay (in ns) of the circuit is _____

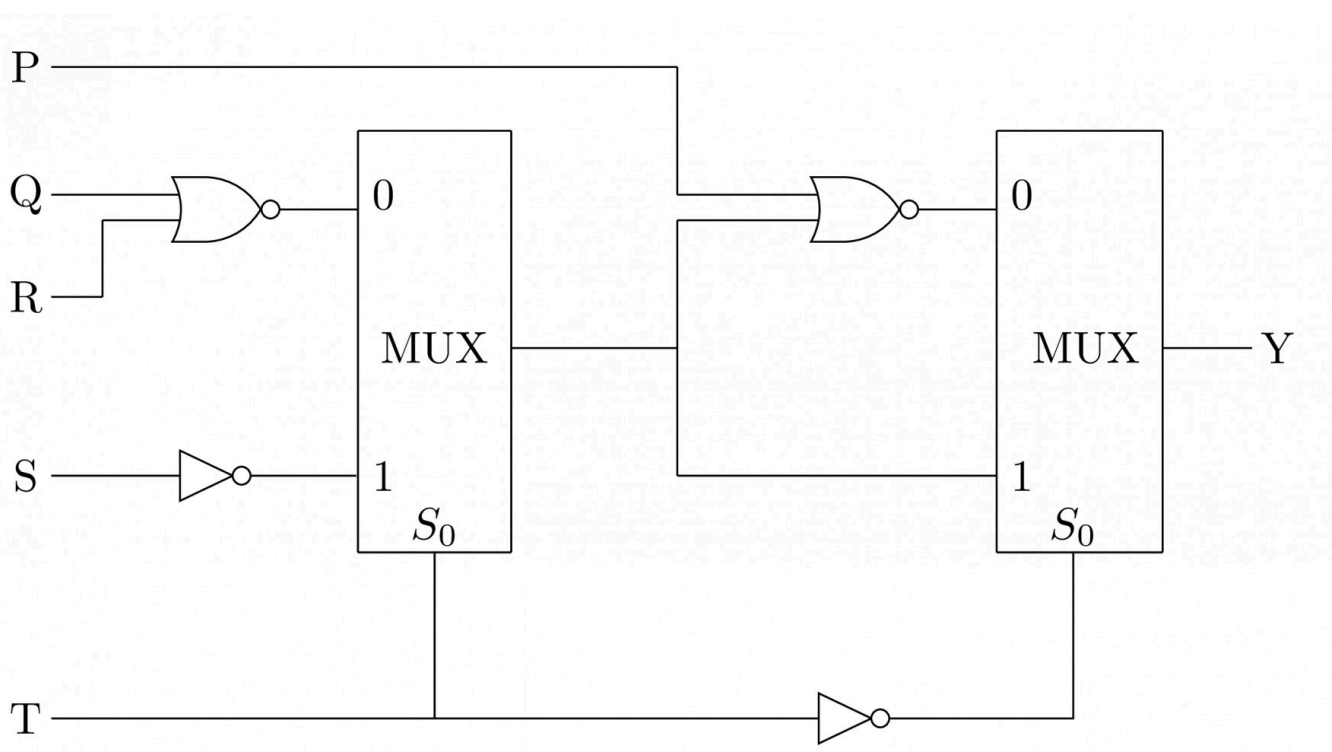

Your Answer: | Correct Answer: 6 | Not Attempted | Time taken: 00min 00sec | Discuss

Q #35 | Multiple Choice Type | Award: 2 | Penalty: 0.67 | Databases

Consider a relation $R(A, B, C)$, with the following functional dependencies: $AB \rightarrow C$; $AC \rightarrow B$.

A can take 20 distinct values, B can take 10 distinct values and C can take 100 distinct values.

What is the maximum possible size (in tuples) of the self join of R on C.

A. 4000

B. 200

C. $4,00,000$

D. 20000

Your Answer: | Correct Answer: A | Not Attempted | Time taken: 00min 00sec | Discuss

Q #36 | Numerical Type | Award: 2 | Penalty: 0 | Databases

How many records can we put into a block of size 4096 bytes with the following conditions?

A. Each record has the following fields in order: a real of 6 bytes, a character string of length 17 bytes, and an 8 byte timestamp.

B. The record header consists of two 4 byte pointers and one 10 byte date.

C. Record Fields (including the fields of record header) must start at a byte location that is a multiple of 4.

D. Block header includes eight additional 4-byte integers.

Your Answer: | Correct Answer: 72 | Not Attempted | Time taken: 00min 00sec | Discuss

Q #37 | Numerical Type | Award: 2 | Penalty: 0 | Databases

A B-Tree of order m is an m-way search tree with the following properties:

- The non-leaf nodes store up to $m-1$ keys to guide the searching.
- The root is either a leaf or has between 2 and m children.
- All non-leaf nodes (except the root) have between $\lceil m/2 \rceil$ and m children.

The record pointer, key field and block pointer sizes of a B-Tree are 8 bytes, 10 bytes, and 6 bytes, respectively. If the block size is 1 KB , then the order of the tree is ____

Your Answer: | Correct Answer: 43 | Not Attempted | Time taken: 00min 00sec | Discuss

Q #38 | Numerical Type | Award: 2 | Penalty: 0 | Theory of Computation

Convention. When we use a diagram to depict a pda, we use our own private conventions. A single instruction (p, a, A, q, α) is given as an arc from state p to state q labelled by $a; A/\alpha$. Label $a; +A$ represents a set of instructions pushing A on top of the stack (p, a, X, q, AX) for all $X \in \Gamma$, while label a represents the set (p, a, X, q, X) of instructions that 'ignore' the stack.

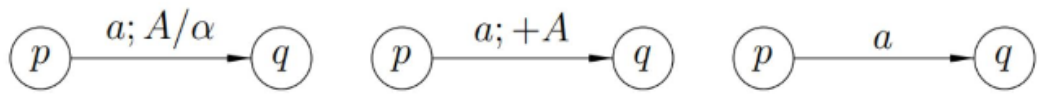

Consider the following pushdown automaton over the input alphabet $\Sigma = \{a, b, c\}$ and stack alphabet $\Gamma = \{Z_{in}, A\}$. Let $Z_{in} \in \Gamma$ be the initial stack symbol.

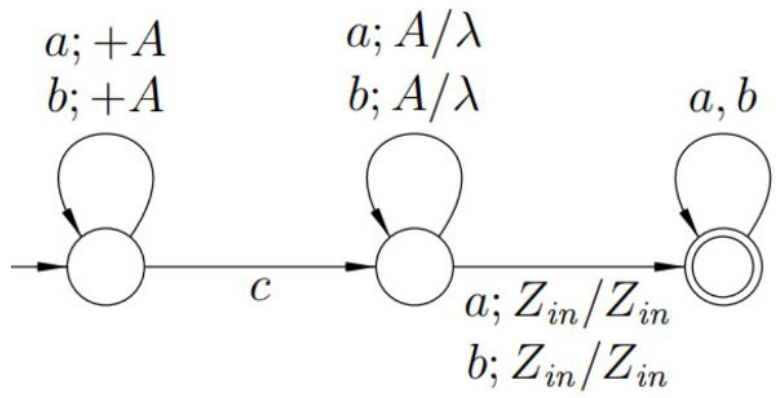

The number of strings of length 8 accepted by the above pushdown automaton is? (Assume string acceptance by final state)

Your Answer: | Correct Answer: 512 | Not Attempted | Time taken: 00min 00sec | Discuss

Q #39 | Multiple Select Type | Award: 2 | Penalty: 0 | Theory of Computation

Which of the following statements is/are true ?

A. Every subset of a regular language is regular.

B. If $L^* \neq \emptyset$ then $L \neq \emptyset$.

C. If L is regular, then so is $\{xy \mid x \in L \text{ and } y \notin L\}$

D. If L is a regular language, then so is $\{w : w \in L \text{ and } w^R \in L\}$

Your Answer: | Correct Answer: C;D | Not Attempted | Time taken: 00min 00sec | Discuss

Q #40 | Multiple Select Type | Award: 2 | Penalty: 0 | Theory of Computation

Consider the Turing Machine M over the input alphabet $\Sigma = \{0, 1\}$ and $\Gamma = \{0, 1, x, y, \sqcup\}$, described by the following diagram. The reject state q_{rej} is not shown, and all "missing" transitions are assumed to go to the reject state.

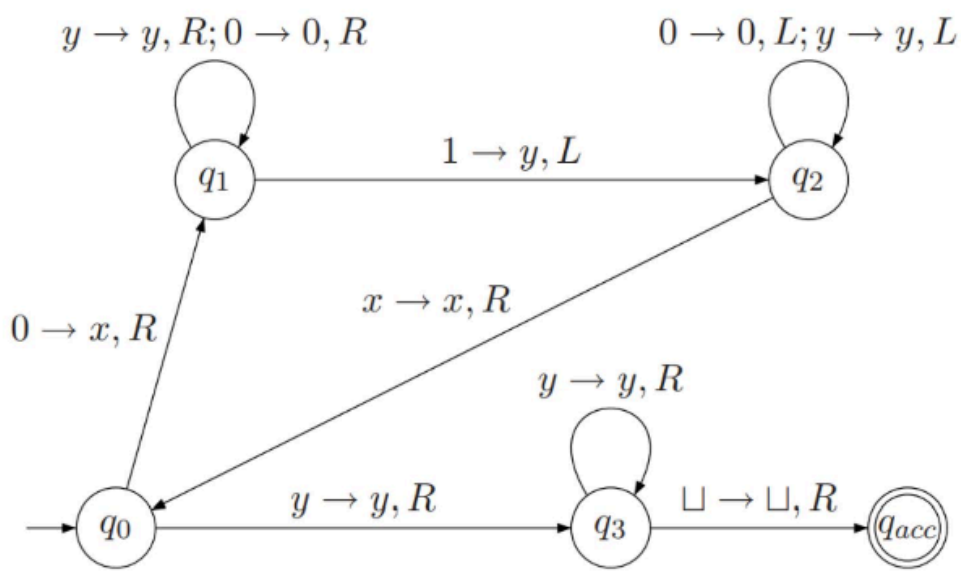

Which of the following strings is accepted by M ?

A. 0111

B. 000111

C. 111000

D. 010101

Your Answer: | Correct Answer: B | Not Attempted | Time taken: 00min 00sec | Discuss

Q #41 | Multiple Select Type | Award: 2 | Penalty: 0 | Theory of Computation

Let Σ be some alphabet. For a language $L \subseteq \Sigma^*$ and a string $w \in \Sigma^*$, the suffix language (also called right quotient) is

$$L_w = \{x \mid wx \in L\}.$$

The set of all distinct suffix languages of L is

$$\{L_w \mid w \in \Sigma^*\}.$$

Which of the following statements is/are true about the suffix languages of a regular language ? A. If a DFA with n states exists for a language L, then L must have at least n suffix languages. B. If a DFA with n states exists for a language L, then L must have at most n suffix languages. C . For a regular language L , the number of suffix languages of L is finite. D. For an infinite regular language L , the number of suffix languages of L is infinite.

Your Answer: | Correct Answer: B;C | Not Attempted | Time taken: 00min 00sec | Discuss

Q #42 | Multiple Select Type | Award: 2 | Penalty: 0 | Theory of Computation

Let $\mathrm{S} = \{\mathrm{a}, \mathrm{b}\}$ be an alphabet of two symbols.

Which of the following languages over S is/are regular?

A. $\mathrm{L}_1 = \{\mathrm{uv} \mid \mathrm{u}, \mathrm{v} \in \mathrm{S}^*, \quad l(\mathrm{v}) = 2.\, l(\mathrm{u})\}$

B. $\mathrm{L}_2 = \{\mathrm{ww} \mid \mathrm{w} \in \mathrm{S}^*\}$

C. $\mathrm{L}_3 = \{\mathrm{wzw} \mid \mathrm{w}, \mathrm{z} \in \mathrm{S}^*\}$

D. The set of words $\mathrm{w} \in \mathrm{S}$ * in which each occurrence of a is followed immediately by an occurrence of b.

Your Answer: | Correct Answer: A;C;D | Not Attempted | Time taken: 00min 00sec | Discuss

Q #43 | Numerical Type | Award: 2 | Penalty: 0 | CO & Architecture

Suppose you have the following system that consists of:

- $\mathrm{L1}$ cache with a hit time of 2 cycles

- $\mathrm{L2}$ cache with a hit time of 10 cycles
- DRAM with an access time of 100 cycles

After an amount of memory accesses, we get the following data:

- $\mathrm{L1}$ cache is accessed by 100 times
- $\mathrm{L2}$ cache is accessed by 50 times
- DRAM is accessed by 20 times

Average memory access time (AMAT) of the systems is ? (in cycles)

Your Answer: | Correct Answer: 27 | Not Attempted | Time taken: 00min 00sec | Discuss

Q #44 | Multiple Select Type | Award: 2 | Penalty: 0 | Operating System

Consider the following resource allocation graph involving three processes P_1, P_2, P_3 and three resource types R_1, R_2, R_3.

The resource allocation graph is shown below:

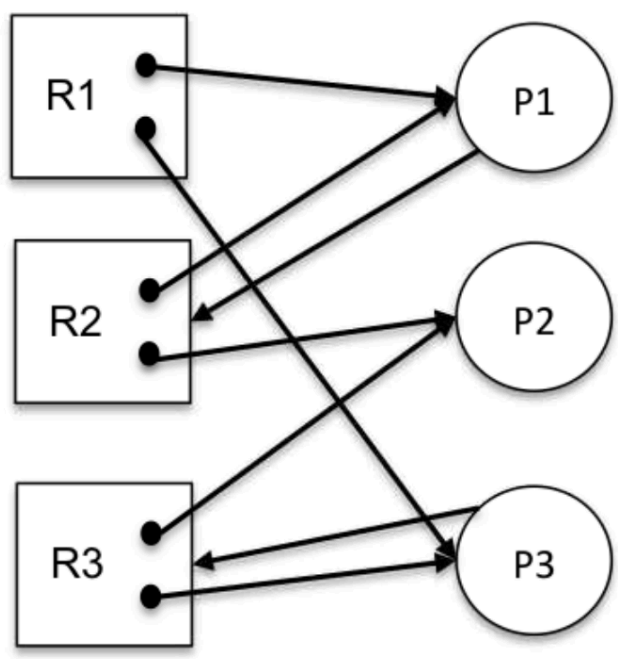

Each resource type initially has two instances.

Select all statements that are correct.

A. The given resource allocation graph does not contain a deadlock since a safe execution sequence exists.
B. If process P_2 additionally requests one instance of resource R_1, then the system will enter a deadlock.
C. Assume the situation described in option (B), and in addition assume that resource R_2 now has three instances instead of two. In this case, the system will not be in a deadlock state.
D. Starting from the original resource allocation graph, if a new process P_4 is added such that it requests one instance of resource R_1, then the system will necessarily be in a deadlock.

Your Answer: | Correct Answer: A;B;C | Not Attempted | Time taken: 00min 00sec | Discuss

Q #45 | Multiple Choice Type | Award: 2 | Penalty: 0.67 | Operating System

Three processes execute concurrently on a shared processor and may use semaphores with standard `P()` and `V()` operations. The intent is to print the word `HELLO` exactly once, in the correct order.

Each process runs inside an infinite loop, and execution may interleave arbitrarily.

The initial values of the counting semaphores are:

$$a = 1, \quad b = 0, \quad c = 0$$

The partially synchronized code of the three processes is shown below. Some semaphore operations are already given, while the remaining ones are marked as `BLANK`. Each `BLANK` may be replaced by one or more `P()` or `V()` operations.

Process 1	Process 2	Process 3

`Loop1:`
`P(a);`
`print("H");`
`print("E");`
`V(b);`
`BLANK`
`goto Loop1;`
	`Loop2:`
	`P(b);`
	`print("L");`
	`BLANK`
	`goto Loop2;`
		`Loop3:`
		`BLANK`
		`print("O");`
		`goto Loop3;`

What is the minimum total number of additional `P()` and `V()` operations required to replace all the `BLANK` statements so that the intent is satisfied?

A. 3

B. 4

C. 5

D. 6

Your Answer: | Correct Answer: B | Not Attempted | Time taken: 00min 00sec | Discuss

Q #46 | Multiple Choice Type | Award: 2 | Penalty: 0.67 | Programming in C

Consider the following recursive function:

```
unsigned int f ( unsigned int n )
{
  if (n <= 2) return 1;
  return f(n-3) + f(n-1);
}
```

What is the maximum height to which the recursion stack grows when the outermost call is $f(10)$? Assume that the stack is empty just before this outermost call.

A. 5

B. 9

C. 13

D. 32

Your Answer: | Correct Answer: B | Not Attempted | Time taken: 00min 00sec | Discuss

Q #47 | Multiple Choice Type | Award: 2 | Penalty: 0.67 | Programming in C

What is the output of the following program?

```
struct node {
  int cval;
  struct node *next;
}

main()
{
  struct node N1, N2, N3;
  N1.cval = 1; N2.cval = 10; N3.cval = 100;
  N1.next = &N2; N2.next = &N3;  N3.next = &N1;
  printf("%d,%d", N2.next -> cval, N2.next -> next -> cval);
}
```

A. $1, 10$

B. $1, 100$

C. $10, 100$

D. $100, 1$

Your Answer: | Correct Answer: D | Not Attempted | Time taken: 00min 00sec | Discuss

Q #48 | Multiple Choice Type | Award: 2 | Penalty: 0.67 | Data Structures

Consider the linked list shown below, with `head` pointing to the first node. Here, `link` denotes a pointer type to a node of the linked list (i.e., a typedef for `struct node *`).

$1 \rightarrow 2 \rightarrow 3 \rightarrow 4 \rightarrow 5 \rightarrow 6 \rightarrow \text{NULL}$

The following code segment is executed:

```
link head, q, p;
q = NULL;
while (head != NULL)
{
  p = head;
  head = head->next;
  p->next = q;
  q = p;
}
```

What is the final linked list after the execution of the above code?

A. $1 \rightarrow 2 \rightarrow 3 \rightarrow 4 \rightarrow 5 \rightarrow 6 \rightarrow \text{NULL}$

B. $6 \rightarrow 5 \rightarrow 4 \rightarrow 3 \rightarrow 2 \rightarrow 1 \rightarrow \text{NULL}$

C. $2 \rightarrow 1 \rightarrow 4 \rightarrow 3 \rightarrow 6 \rightarrow 5 \rightarrow \text{NULL}$

D. $1 \rightarrow \text{NULL}$

Your Answer: | Correct Answer: B | Not Attempted | Time taken: 00min 00sec | Discuss

Q #49 | Multiple Choice Type | Award: 2 | Penalty: 0.67 | Data Structures

You are given two empty stacks S_1 and S_2.

Initially, S_1 (top $\rightarrow$ bottom) contains:

$$S_1 = [1, 2, 3]$$

A mysterious procedure is executed as follows:

```
MysteriousMove(S1, S2):
  if S1 is empty:
    return
  x <- Pop(S1)
  MysteriousMove(S1, S2)
  Push(S2, x)
```

After the call `MysteriousMove(S1, S2)` completes, the content of S_2 (from top $\rightarrow$ bottom) is:

A. $[3, 2, 1]$
B. $[1, 2, 3]$
C. $[2, 3, 1]$
D. None of the above

Your Answer: | Correct Answer: B | Not Attempted | Time taken: 00min 00sec | Discuss

Q #50 | Multiple Choice Type | Award: 2 | Penalty: 0.67 | Algorithms

Consider an undirected graph $G = (V, E)$ and a subset $S \subseteq V$. We say that an element $u \in S$ is reachable from a different element $v \in S$ if there exists a path between u and v in G.

Design an algorithm to determine whether there exist two distinct vertices in S such that one is reachable from the other. Your algorithm should run in time $O(|V| + |E|)$.

Which of the following algorithms satisfies the above requirement?

A. Compute all-pairs shortest paths in G, and check whether any two vertices in S have a finite distance between them.

B. For each vertex $s \in S$, run a DFS starting from s and check whether any other vertex of S is visited.

C. Compute the connected components of G. For each connected component, count how many vertices from S it contains, and return true if any component contains at least two vertices from S.

D. Sort the vertices of S by degree and check whether any two consecutive vertices are adjacent.

Your Answer: | Correct Answer: C | Not Attempted | Time taken: 00min 00sec | Discuss

Q #51 | Multiple Select Type | Award: 2 | Penalty: 0 | Algorithms

Consider the following statements related to shortest path algorithms.

Select **all** statements that are correct.

A. For all weighted graphs and all vertices s and t, Bellman–Ford starting at s will always return a shortest path to t.
B. If all edges in a graph have distinct weights, then the shortest path between two vertices is unique.
C. At the termination of the Bellman–Ford algorithm, even if the graph has a negative-length cycle, a correct shortest path is found for a vertex for which the shortest path is well-defined.
D. Given a graph $G = (V, E)$ with positive edge weights, the Bellman–Ford algorithm and Dijkstra's algorithm can produce different shortest-path trees despite always producing the same shortest-path weights.

Your Answer: | Correct Answer: C;D | Not Attempted | Time taken: 00min 00sec | Discuss

Q #52 | Multiple Choice Type | Award: 2 | Penalty: 0.67 | Probability

Consider two independent random variables X and Y with identical distributions. The variables X and Y take values $0, 1$ and 2 with probabilities $\frac{1}{2}, \frac{1}{4}$ and $\frac{1}{4}$ respectively. What is the conditional probability $P(X+Y=2 \mid X-Y=0)$?

A. 0

B. $1/16$

C. $1/6$

D. 1

Your Answer: | Correct Answer: C | Not Attempted | Time taken: 00min 00sec | Discuss

Q #53 | Multiple Choice Type | Award: 2 | Penalty: 0.67 | Calculus

Suppose f is a differentiable function with $f''(x) > 0$ for all real numbers x. Assume that $f(1) = 3$ and $f(5) = 3$. Which one of these statements must be true?

A. $f'(x)$ is decreasing at $x = 3$.

B. $f(x) \geq 0$ for all real numbers x.

C. f has an inflection point.

D. f has a local minimum.

Your Answer: | Correct Answer: D | Not Attempted | Time taken: 00min 00sec | Discuss

Q #54 | Multiple Select Type | Award: 2 | Penalty: 0 | Computer Networks

Assume a Go-Back-N (GBN) sender and receiver. The receiver acknowledges each data segment with a cumulative ACK indicating the next expected data segment. Furthermore, it saves out-of-order segments in a buffer. The sender and receiver buffer can contain four segments each. The timeout period is much larger than the time required for the sender to transmit four segments in a row.

The sender wants to transmit 10 data segments numbered $0, 1, \ldots, 9$ to the receiver. Assume that *exactly one* data segment is lost.

Select **all** statements that are correct.

A. In the *best case*, the sender transmits a total of 11 data segments.
B. In the *best case*, the lost data segment is segment 0.
C. In the *worst case*, the sender transmits a total of 14 data segments.
D. In the *worst case*, loss of an early data segment (for example, segment 1) causes retransmission of all data segments in the current window.

Your Answer: | Correct Answer: A;C;D | Not Attempted | Time taken: 00min 00sec | Discuss

Q #55 | Multiple Choice Type | Award: 2 | Penalty: 0.67 | Computer Networks

Consider 32-bit IPv4 addresses.

The routing table is given below.

IP Prefix	Output Port
$00\ldots$	Port 4
$01\ldots$	Port 3
$010\ldots$	Port 5
$0111\ldots$	Port 9
$11\ldots$	Port 2
$00\ldots00$	Port 8

How many 32-bit IPv4 addresses are forwarded along Port 3?

Reminder: $2^k - 2^{k-1} = 2^{k-1}$

A. 2^{24}

B. 2^{26}

C. 2^{28}

D. 2^{30}

Your Answer: **Correct Answer: C** Not Attempted Time taken: 00min 00sec Discuss

Copyright & Stuff